Non linear response of steel braced frames buildings with SSI effects

L.R. Fernández-Sola [(1)] y J. Hernández-Torres [(2)]

(1) *Research Professor, UAM-Azcapotzalco, lrfs@azc.uam.mx*
(2) *Graduate Student, UAM-Azcapotzalco, ingeniero.h.torres@hotmail.com*

Abstract

Analysis of buildings under seismic actions with flexible base must consider two principal components in the structure displacement, one being introduced by structural deformation and the other due to a rigid body behavior. This effect produces that the relation between ductility and inelastic capacity of the structure is modified. In addition, consideration of flexible base may change the distribution of internal forces along the structure that could generate variations on the ductility demands over different structural elements. This work explores the behavior of three (4, 7 and 10-story) regular buildings with steel braced frames considering the dynamic soil structure interaction on soft soil. Buildings are located on different sites in order to explore different spectral scenarios. The responses of the buildings with flexible base are compared and contrasted with the rigid base cases. The inelastic behavior of the buildings is characterized in terms of failure mechanism, overstrength factors, ductility capacity and demands. Pushover analysis is used to establish the inelastic capacity parameters, by the comparison of the capacity curves of the building with rigid (fixed) and flexible base. In addition, the comparison of ductility demands with different base stiffness is presented. Ductility and element force demands are computed with non linear time history dynamic analysis. Accelerograms used as excitation are scaled to meet the design spectral acceleration in all cases. Soil-foundation dynamic stiffness (impedance functions) is introduced in the analysis by using a set of springs in horizontal and rocking direction. A mat foundation is considered. Springs stiffness is computed considering the dynamic behavior and properties of the soil-foundation system with the procedure described in Mexican Building Code. Results show that ductility capacity of the soil-structure system is reduced if rigid body displacement components are not eliminated. On the other hand, ductility demands and hysteretic behavior of the global system are modified due to base flexibility.

Keywords: Dynamic soil structure interaction, steel buildings, Inelastic behavior.

1. Introduction

Structural design of buildings under seismic excitations considers that structures will undergo into inelastic behavior, which provides additional capacity and energy dissipation. In order to achieve a stable performance under inelastic behavior, the ductility and capacity of the building must be studied. Modern codes include design procedures based on the force reductions associated with non-linearity on the structure. In these procedures, specific collapse mechanisms are assumed (e.g. weak beam-strong column). When the base of the structure is consider fixed, the whole displacement is associated with structural deformations. Under these considerations, the ductility of the structure is defined directly by the ratio of maximum and yield displacements.

In some cases, the structures supporting soil is not stiff enough to produce a fixed base condition and soil properties become critical to structure performance. The interaction between soil and foundation can modify the dynamic properties of the soil-structure system, the characteristics of the excitation and soil behavior. The effects which arise form soil-foundation joint performance are defined as Dynamic Soil Structure Interaction (DSSI). The variation of structural period (lengthening) and damping produced by system flexibilization are the most recognized [1]. These variations produce a modification on the spectral acceleration which the structure will experience. Procedures included on building codes [2-5] use the base shear variation associated with spectral acceleration shift to compute changes of remaining response quantities (e.g. displacements, element forces, etc). Soil-foundation flexibility can be represented by its stiffness in different directions (e.g.

horizontal=K_x and rotational=K_r). Even though these DSSI implications are the most used, other effects of base flexibility could be also important.

Relative displacements between the structure supports and ground are produced due to base flexibility. Total displacement of the soil-structure system includes two principal components, one introduced by structural deformation (u) and other due to a rigid body behavior (u_0 and ϕ) as shown on Fig. 1. Since total displacement (u_t) is not directly associated with structure deformation, the relation between ductility, defined as before, and inelastic deformation of the structure changes, as shown on the following.

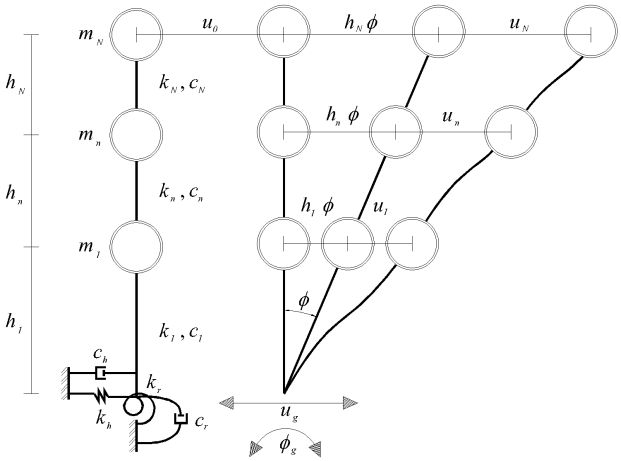

Fig. 1 Total displacement components on flexible base systems.

Inelastic behavior of structures with flexible base has been previously studied. Some studies use an equivalent system with a single degree of freedom (ESDOF) in order to represent the system with flexible base [6-9]. The equivalent properties (fundamental period, damping ratio and ductility) of the ESDOF system are set to reproduce the inelastic response of the system with flexible base.

This work explores the inelastic behavior of steel braced structures with flexible base. Non linear static analysis (pushover) is performed in order to stablish the inelastic capacity of the structures. In addition, the non linear dynamic behavior of the buildings are analyzed, under the same assumptions than non linear static analysis.

2. Building and foundation characteristics

Buildings were designed following the procedure described on the Mexico City Building Code (MCBC) [2] and the design procedure proposed by Tapia and Tena-Colunga for the capacity design of steel braced frames [10]. Design and elements dimensions' details can be found on [11]. On figure 2, representative schemes of plain and elevation view of buildings are presented. Frames are designed with moderate ductility criteria (μ=2) accordingly to MCBC [2]. Capacity design recommendations are followed. Three buildings are designed with 4, 7 and 10 stories. Fundamental periods of the buildings with fixed base are reported on table 1 and their corresponding design spectra are shown on figure 2. Soil properties correspond to a soft soil represented by a homogeneous layer with different thickness (Hs) and shear wave velocity of Vs= 80 m/s. Foundation consists on a mat foundation overlaying this homogenous soil layer.

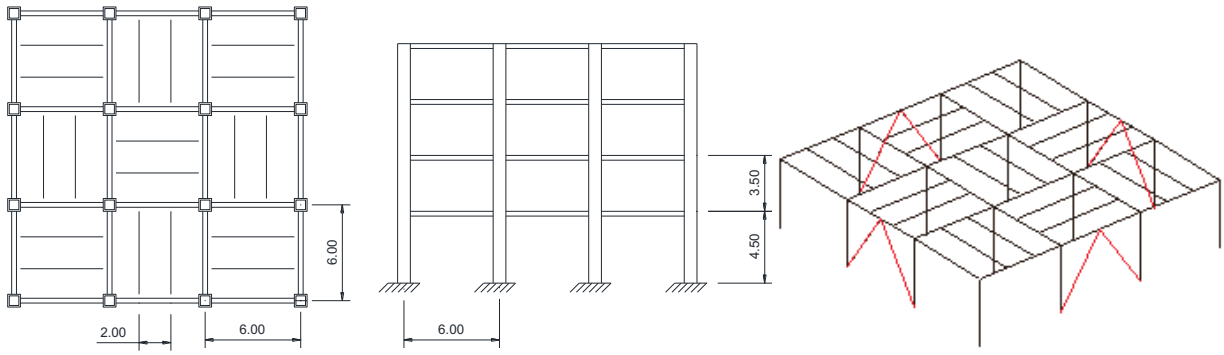

Fig. 2 – Building plain and elevation and base flexibility model.

Table 1.- Buildings fundamental period with fixed (T) and flexible base ($\tilde{T}$), soil layer thickness (H_s), mat foundation embedment depth (D) and equivalent damping with flexible base ($\tilde{\zeta}$).

Building	T (s)	$\tilde{T}$ (s)	H_s (m)	D (m)	$\tilde{\zeta}$ (%)
4-story (4S)	0.522	0.653	30	2.0	7.3
7-story (7S)	0.739	0.978	24	3.4	5.1
10-story (10S)	0.990	1.325	22	5.0	5.0

Base flexibility is introduced by using a set of distributed springs along mat foundation (figure 3). The constants of the springs are computed with the dynamic stiffness concept (impedance function) as presented by Gazetas [12]. This approach considers the influence of the soil mass and stiffness, so the dynamic stiffness of the soil-foundation system depends on the frequency of the excitation. Software DYNA6 [13] was used to estimate horizontal and rocking impedance functions. Only the value corresponding to the fundamental frequency of the soil-structure system was used. Given that the period of the soil-structure system with flexible base ($\tilde{T}$) and base flexibility are mutually dependent, it is necessary to perform an iterative process to establish the definitive values of impedance functions.

Additional damping introduced by DSSI is taken into account by using an effective damping ratio. Effective damping ratio was computed with the procedure included on MCBC [2]. Kinematic interaction is neglected. Since soil-foundation dynamic stiffness approach considers that all stiffness is lumped on a single joint, a geometric distribution of the stiffness on distributed springs is performed. Horizontal stiffness is uniformly distributed along 40 horizontal springs (Figure 3). Rocking stiffness is represented by the contribution of horizontal springs and the contribution of 16 vertical springs as shown on figure 2. Geometry of foundation is considered in this way. All joints of foundation are constrained with a rigid body constrain. More details of this procedure can be found on [11].

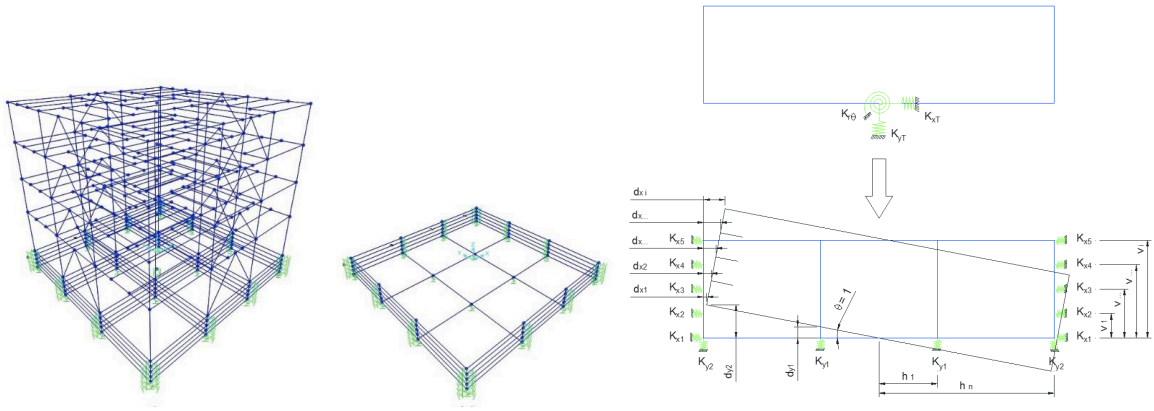

Fig. 3 – Model of base flexibility

3. Selected ground motions

Three different ground motions were selected (S1, S2 and S3). Ground motion corresponds to records on rock or very stiff soil on different locations within Mexico. All records correspond to subduction earthquakes. Distance from stations from S1 and S2 records to epicenter are around 350 and 400 km respectively, while S3 station is very near to the fault. Acceleration records are shown on figure 3. To take into account site effects to be coherent with the considered soil profile (table 1), a one-dimensional wave propagation model was used, with the complex frequency response method using the transfer function defined on [1].

Once the records were modified by site effects, excitation was scaled to meet design elastic spectral pseudo accelerations for fundamental periods reported on table 2, in order to meet the spectral acceleration values considered on the code.

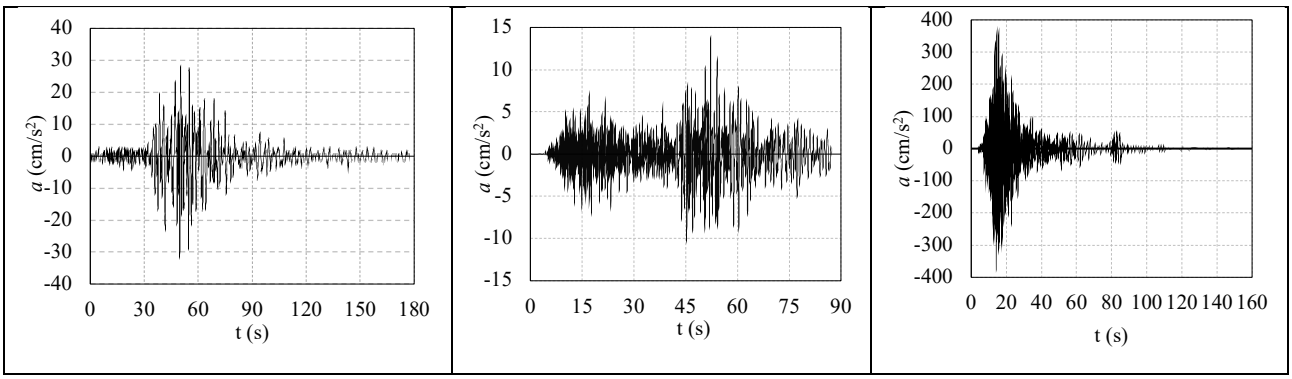

Fig 4.- Acceleration records S1, S2 and S3.

Table 2.- Fundamental periods with fixed (T) and flexible base ($\tilde{T}$) and associated normalized spectral accelerations (Sa/g and $\tilde{S}a/g$).

	T (s)	Sa/g	$\tilde{T}$ (s)	$\tilde{S}a/g$
4S	0.522	0.833	0.653	0.792
7S	0.739	0.924	0.978	0.924
10S	0.990	0.924	1.325	0.924

Different spectral scenarios are considered. One of the most important modifications that DSSI introduces in to structural inelastic behavior is the modification on the relation between yield strength reduction factor (R_μ) and ductility demand (μ) as shown on previous studies [2-5, 14]. This relation depends on the spectral shape of the excitation and the spectral position of structures fundamental period, especially for soft soil motions [15]. Normalized elastic response spectrum of used records are shown on figure 5.

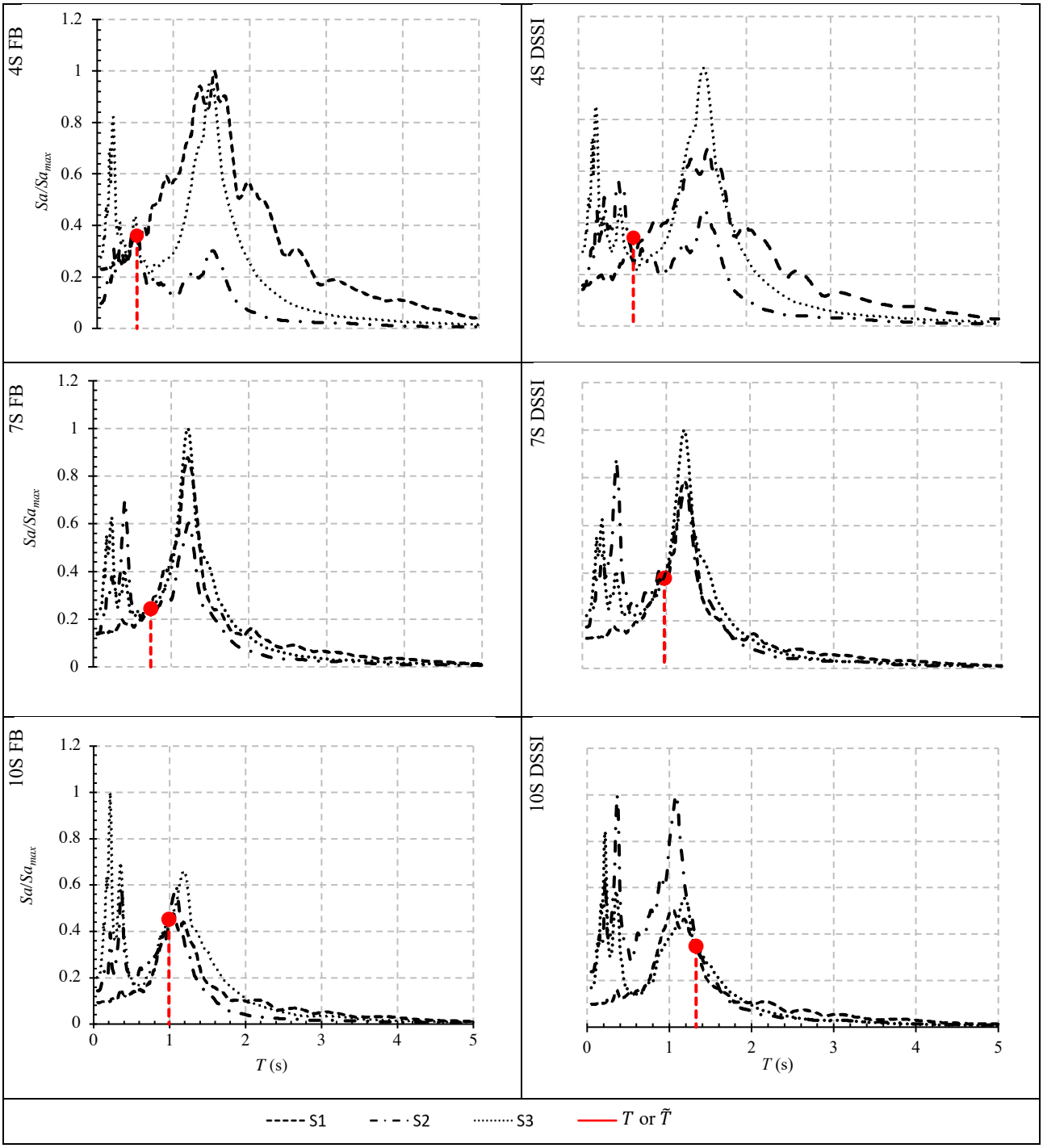

Fig 5.- Normalized elastic response spectrum of S1, S2 and S3 records for 4S, 7S and 10S buildings with fixed (FB) and flexible base (DSSI).

4. Numerical analysis and results

A triangular load pattern is used for the pushover analysis with displacement control. No-linear behavior of elements (beams and columns) is described by the definition of the nonlinear moment-curvature relations. Moment-curvature relations were defined accordingly to FEMA 356 recommendations for steel elements. Braces non-linear behavior is described by nonlinear axial force-deformation relations, considering the effect of buckling for the compression branch.

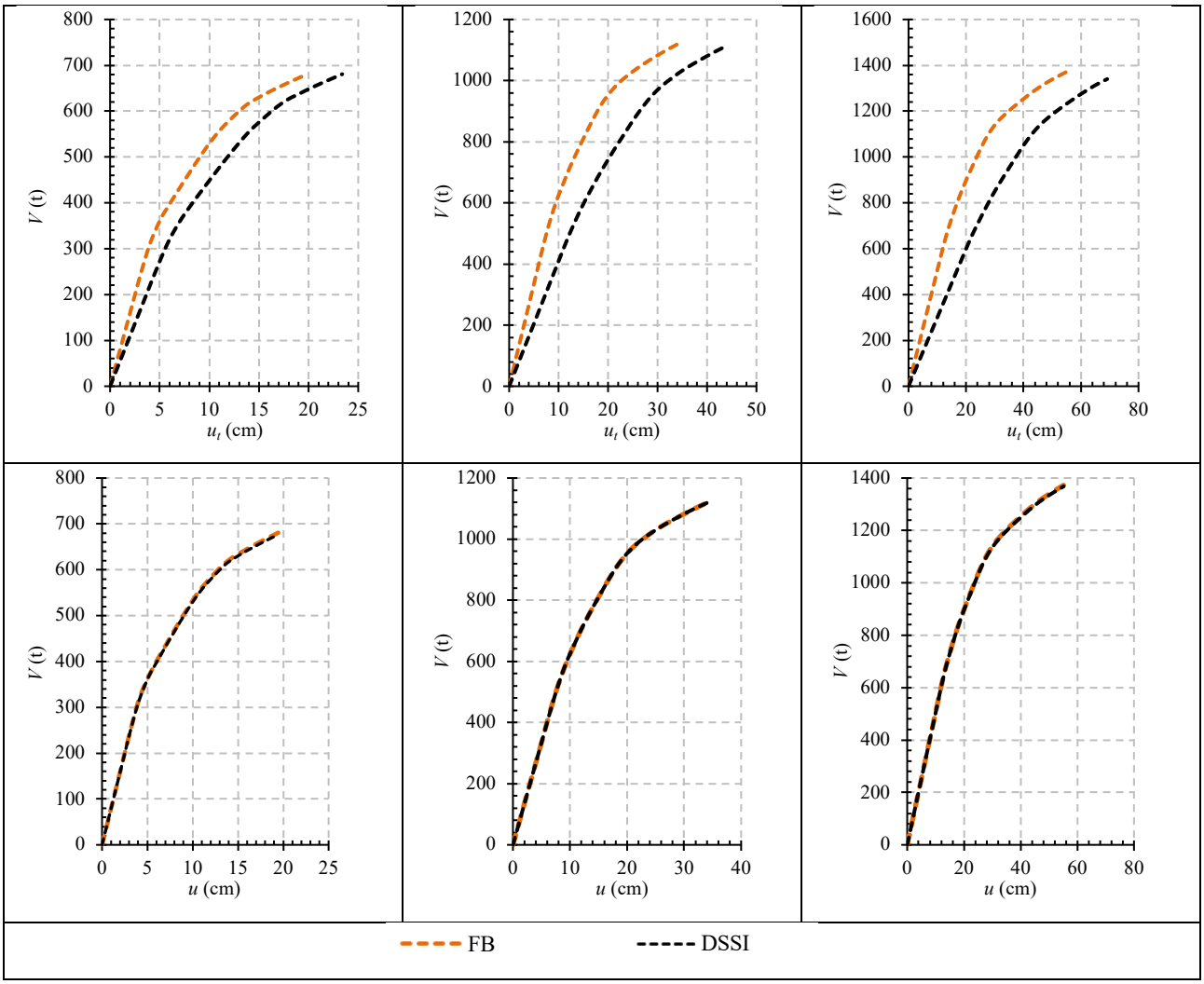

Fig. 6 – Capacity curves of the building with fixed (FB) and flexible base (DSSI) considering total displacement (top) and structure deformation (bottom).

Capacity curves (base shear-average drift) of frames are presented in figure 6. The average drift is computed as the ratio of the displacement of the top of the building and building total height. Final mechanism is defined when one of the following three conditions is achieved: a) a plastic hinge develops a rotation greater than the maximum rotation feasible for that element; b) all columns of the same story develop plastic hinges at both ends, producing a soft story failure mechanism and c) all element ends that concur at one joint develop plastic hinges, producing a joint plastic mechanism.

As mentioned before, to assess the ductility variations on buildings with fixed and flexible base, two sets of results are presented. First, capacity curves are computed considering total displacement (u_t) which includes both the displacement associated with structure deformation (u) and the displacement produced by rigid body behavior (u_0 and ϕ). Ductility reductions computed with this set of results can be associated with the increment of the yield displacement. The second set of capacity curves are computed using only the displacement associated with structure deformation (u). Capacity curves for the building with fixed and flexible base are presented in figure 6.

Using the capacity curves, idealized primary curves were constructed to define yield and maximum shear and displacement. Two sets of ductility factors are computed, one using as yielding displacement the one where the any element yields (μ) and other using the idealized primary curves (μ'). With yield and maximum values, the ductility factor is defined. On table 3, ductility factor computed for the structure with fixed (FB) and flexible base (DSSI) are shown. It can be seen that when total displacement is considered, base flexibility reduces the developed ductility ($\tilde{\mu}$). This ductility reduction could be associated with the increment of yield displacement as described in [6-9, 14]. On the other hand, when only the displacement associated with structure deformation is considered (μ) ductility remains very similar. This is an expected result since the inelastic capacity of the building must be independent on the base condition if P-Δ effects are small enough to not change structures behavior [14]. In addition, effective ductility ($\tilde{\mu}_{Ec}$) computed with the proposed equation by Fernández-Sola and Huerta [14]. This equation considers the ductility modification in terms of the proportion of total displacement and rigid body components at yield and maximum displacement. It can be seen that values computed with the proposed equation are very similar to those computed with the idealized curves.

Table 3.- Ductility factors computed with the different approaches.

	μ_{FB}	μ'_{FB}	$\tilde{\mu}_{DSSI}$	$\tilde{\mu}'_{DSSI}$	μ_{DSSI}	μ'_{DSSI}	$\tilde{\mu}'_{Ec}$
4S	4.88	3.43	4.05	2.81	4.90	3.43	2.84
7S	4.30	2.81	3.68	2.25	4.31	4.30	2.27
10S	4.10	2.75	3.34	2.19	4.18	4.10	2.19

Ductility demands were obtained by non linear time history analysis. Global ductility demands (table 4) and time history total displacements (figure 7) are reported. For global behavior, as well as in the pushover analysis, two types of results were computed for the building with flexible base, one considering the total displacement and other considering only the structure deformation.

The design procedure of inelastic structures is based on setting specific values of R_μ to achieve a target ductility demand. Since μ_{DSSI} is always larger than $\tilde{\mu}_{DSSI}$, it is necessary to use reduced $R_{\mu DSSI}$ values to keep μ_{DSSI} within design values. Variations of R_μ values are analyzed. Base shear of the corresponding linear system (V_0) and R_μ values are shown on Table 4.

Non linear parameters for elements (beams and columns) are the same as for the pushover analysis. Analysis is performed for the whole duration of the excitation, since none of the elements achieves its maximum plastic rotation in any moment. Only inelastic behavior for flexure is considered on beams and columns, since design procedure considers that shear failure is avoided.

Total displacements are always larger on the systems with flexible base, as expected. However, inelastic residual displacements are not. For example, on 4S building subjected to S1, the FB model experienced larger residual displacements. In the same building S3 produces larger residual deformation on the DSSI model. However, in most of the cases, residual deformations are larger on the FB models. The differences between total displacements on FB and DSSI models depends on the excitation. These differences are the smallest with S1 record. Since records are scaled to the same spectral pseudo acceleration, behavior variations must be associated to changes on the modal contribution and spectral shape.

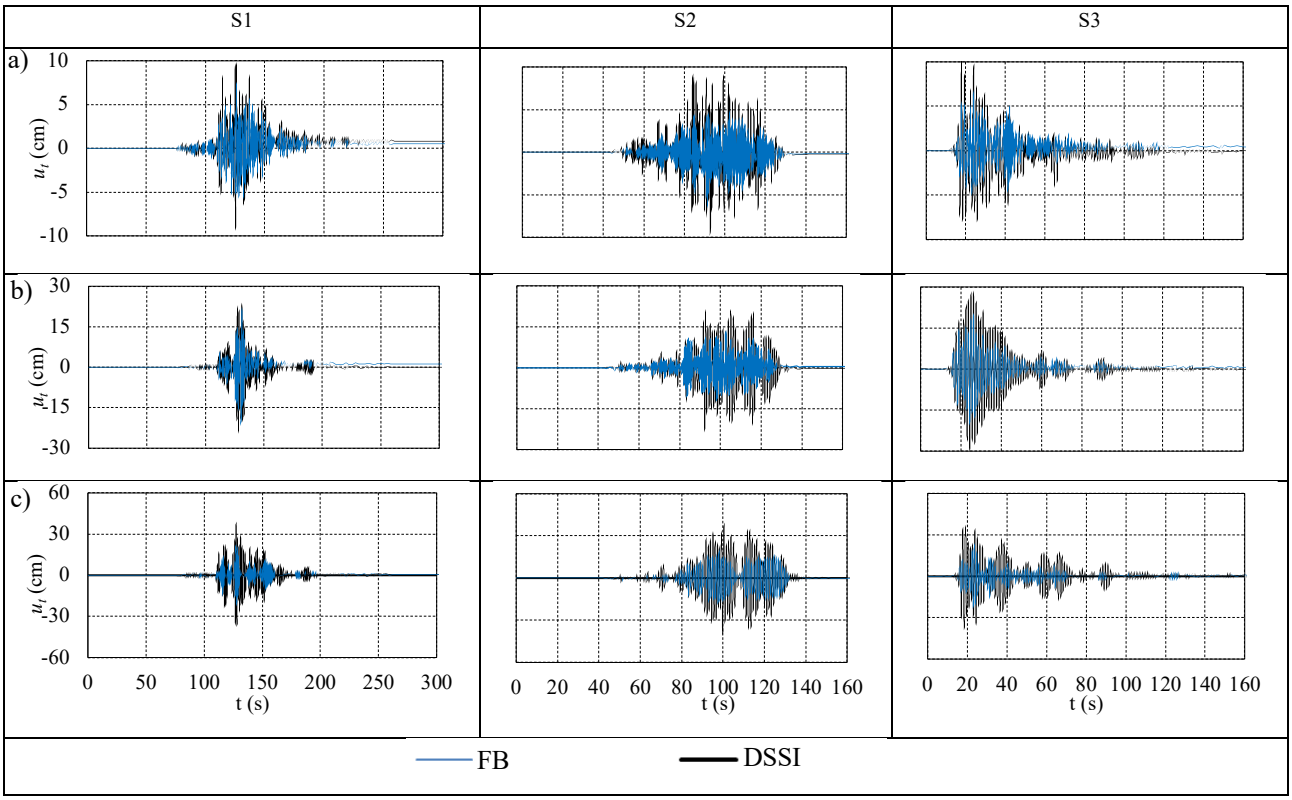

Fig. 7 – Total displacement time history for models with fixed (FB) and flexible base (DSSI) subjected to S1, S2 and S3 records.

Table 4.-Inelastic parameters for the structure with fixed (FB) and flexible base (DSSI) for S1, S2 and S3 excitations for all buildings.

	V_y (t)	u_{yFB} (cm)	u_{uFB} (cm)	μ	V_{0FB} (t)	$R_{\mu FB}$	$R_{\mu FB}$ / μ_{FB}	u_{tyDSSI} (cm)	u_{tuDSSI} (cm)	$\tilde{\mu}_{DSSI}$	u_{yDSSI} (cm)	u_{uDSSI} (cm)	μ_{DSSI}	V_{0DSSI} (t)	$R_{\mu DSSI}$	$R_{\mu DSSI}$ /μ_{DSSI}
4-story																
S1	310.16	3.15	7.60	2.41	672.80	2.17	0.90	5.13	9.99	1.95	3.30	6.88	2.08	655.90	2.11	1.01
S2	310.16	3.90	6.70	1.72	624.20	2.01	1.17	5.78	9.98	1.73	3.86	7.07	1.83	608.20	1.96	1.07
S3	310.16	3.48	7.14	2.05	602.60	1.94	0.95	4.88	10.68	2.19	3.23	7.70	2.38	656.10	2.12	0.89
7-story																
S1	519.83	6.32	22.85	3.61	1,413.00	2.72	0.75	11.40	25.27	2.22	6.78	16.54	2.44	1,239.00	2.44	0.98
S2	519.83	5.99	14.48	2.42	1,326.00	2.55	0.88	11.16	24.02	2.15	6.35	15.95	2.51	1,169.00	2.51	0.90
S3	519.83	6.89	21.42	3.11	1,468.00	2.83	0.91	11.96	30.51	2.55	6.82	21.06	3.09	1,285.00	3.09	0.80
10-story																
S1	672.49	13.39	23.75	1.77	1,678.00	2.50	1.38	21.26	40.50	1.91	11.65	25.93	2.23	1,566.00	2.33	1.05
S2	672.49	11.24	20.78	1.85	1,824.00	2.71	1.47	17.48	42.94	2.46	9.95	29.64	2.98	1,754.00	2.61	0.88
S3	672.49	11.07	24.52	2.21	1,691.00	2.51	1.14	19.53	40.63	2.08	11.13	25.28	2.27	1,739.00	2.59	1.14

As mentioned previously, the ratio between R_μ and μ are affected by DSSI effects and the relation between spectral shape of the excitation and the position of the fundamental period of the building. In order to compare these differences, the ratios of R_μ / μ for all cases are reported on table 7. On DSSI systems, structural ductility demand is only associated with the deformation of the structure (μ_{DSSI}). It can be seen that R_μ / μ are different on FB and DSSI systems. Smaller values of this ratio represent larger ductility demands for a specific R_μ value. Variations of depends on the used record. For example, on the 4-story model, ratios are smaller on the DSSI model for S2 and S3. Opposite to this effect, for the 7-story model ratios are smaller on the FB model for S1 and S2. The larger differences are observed on the 10-story model, where ratios are consistently smaller on the

DSSI case. From these results, it can be observed that the effect of period shift produced by DSSI effects are the one that controls the variation of the ratios between R_μ and μ.

7. Conclusions

Inelastic static and time history analysis steel buildings with braced frames with fixed and flexible base are presented. Buildings with different heights are considered (4, 7 and 10-story) are considered with a mat foundation. Ductility capacities are defined based on the idealized base shear-average drift capacity curves from the static non-linear analysis and with the displacement were the first yield is observed. Ductility demands and yield strength reduction factors are computed from time history non-linear analysis. Average drift was computed in two ways: one with the total displacement of the soil-structure system, which includes structure deformation and rigid body components and other considering only the structure deformation. Impedance functions for the fundamental frequency is used.

From the static non-linear analysis, it is shown that when total displacement is considered (whole soil-structure system), ductility is reduced by base flexibility in general. Ductility reduction in this case is mostly due to the increment on yield displacement produced by system flexibilization. Ductility reduction does not mean a reduction on deformation capacity, it is produced by the difference on the contribution of rigid body components to total displacement at yield and maximum displacement. When only the displacement associated with structural deformation is used, ductility changes are almost null. It means that inelastic capacity of the structure remains equal independently on base flexibility. An expression to compute the relation of soil-structure system ductility and structure ductility is used. This approach considers explicitly how the the contribution of rigid body components influences this relation.

Global ductility demand and the corresponding yield strength reduction factor are modified by base flexibility due to the change of fundamental period. For the flexible base structures, ductility demand on the whole soil-structure system is smaller than the actual ductility demand produced on the structure. It is proved that the ratio between yield strength reduction factor and structure ductility demand are different for the structure with flexible base respect to the fixed base case.

8. Acknowledgements

The financial support of the Mexican National Council for Science and Technology, CONACYT, through the FORDECyT 297246 project, is gratefully acknowledged.

9. References

[1] Wolf JP (1985): *Dynamic Soil-Structure Interaction*. Prentice-Hall.

[2] MCBC (2004): Reglamento de Construcciones para el Distrito Federal, *Gaceta Oficial del Departamento del Distrito Federal*, Mexico, Mexico. *(In Spanish).*

[3] ASCE 7 (2010): Minimum design loads for buildings and other structures, *ASCE Standard ASCE/SEI 7-10*, American Society of Civil Engineers.

[4] NZS 3101-1 (2006): New Zealand Standard Code of Practice for General Structural Design and Design Loadings for Buildings, *Standards Association of New Zealand*, Wellington.

[5] NBCC (2015): National building code of Canada. *National Research Council of Canada*, Ottawa.

[6] Aviles J, Perez-Rocha LE (2005): Soil-structure interaction in yielding systems, *Earthquake Engineering and Structural Dynamics*, **32** (11), 1749-1771.

[7] Eser M, Aydemir C, Ekiz I (2011): Effects of soil-structure interaction on strength reduction factors, *Procedia Engineering*, **14**, 1696-1704.

[8] Rosenblueth E, Resendiz D (1988): Disposiciones reglamentarias de 1987 para tener en cuenta interacción dinámica suelo-estructura, *Series del Instituto de Ingeniería, No. 509*, Universidad Nacional Autónoma de Mexico, Mexico. *(In Spanish).*

[9] Ghannad MA, Ahmadnia A (2006): The effect of soil–structure interaction on inelastic structural demands, *European Earthquake Engineering*, **20** (1), 23-35.

[10] Tapia-Hernández E, Tena-Colunga A (2014): Code-oriented methodology for the seismic design of regular steel moment resisting braced frames. *Earthquake Spectra*, **30** (4): 1683-1709.

[11] Hernández-Torres J (2019): Comportamiento estructural de edificios de acero con base flexible. *Master Dissertation, Posgrado en Ingenieria Estructural, UAM-Azcapotzalco*, (In Spanish).

[12] Gazetas G (1991): Foundation vibrations, *Foundation Engineering Handbook*, Ed. H Y Fang, Van Nostrand Reinhold.

[13] Novak M, Sheta M, El-Hifnawy L, El-Marsafawi H, Ramadan O (2012): DYNA6.1: A computer program for calculation of foundation response to dynamic loads, *Geotechnical Research Centre*, The University of Western Ontario, Canada.

[14] Fernandez-Sola, L R and Huerta-Écatl, J E (2018). Inelastic behavior of systems with flexible base. *Earthquakes and Structures*, **14**(5), 411-424

[15] Miranda, E. (1993). Site-dependent strength-reduction factors. *Journal of Structural Engineering*, **119**(12), 3503-3519.

